OMCAN

BEVERAGE EQUIPMENT

SERVING THE FOOD INDUSTRY SINCE 1951

Stainless Steel Coffee Maker with 2 Liter Thermal Carafe

Model: CM-TW-0002-T Item: 44315

Serve warm coffee to your customers fast and efficiently!

Brew up warm aromatic coffee with our Stainless Steel Coffee Maker. Equip with a 2 Liter thermal carafe, this compact and convenient coffee maker is an excellent addition for any waiting area, break room, coffee shop and much more!

1 YEAR WARRANTY
PARTS AND LABOR

MADE IN CHINA

c UL us

Intertek

Authorized Dealer

BEVERAGE EQUIPMENT

OMCAN

Features:

- Stainless steel body and brew chamber
- Stainless steel panel and durable funnel
- Includes a 2-liter thermal carafe
- Manual on/off switch
- Indicator lights for brewing
- Triple safety protection

TECHNICAL SPECIFICATION	
ITEM NUMBER	44315
MODEL	CM-TW-0002-T
POWER	1450 W
CAPACITY	2-liter thermal carafe
CUPS PER HOUR	Up to 100 cups per hour
BREWING TIME	5 minutes per jug
BREWING TEMPERATURE	93-96°C/199.4-204.8°F
ELECTRICAL	120V/60Hz
DIMENSIONS (DWH)	14.37”x7.67”x18.5”/365x195x470mm
WEIGHT	18.7lbs/8.5kg

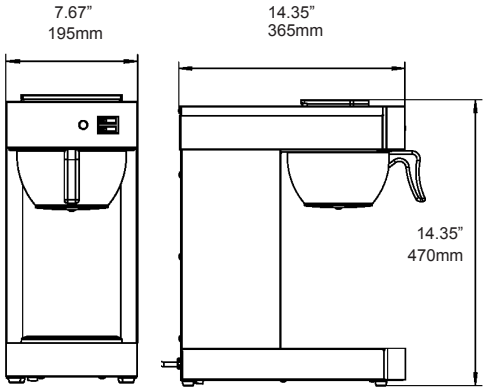

OMCAN INC.
Telephone: 1-800-465-0234
Fax: (905) 607-0234
Email: sales@omcan.com
Website: www.omcan.com

CELEBRATING MORE THAN 60 YEARS OF SERVICE
60
EST. 1951

Follow us to keep up to date with the latest news and offers

2017E&OE